1135

Pitch *10-8.0mm* Wire to Board Connectors

PERFORMANCE

Electrical Rating: AC/DC 250V 7A
額定電壓電流
Insulation Resistance: 1000MΩ min.
絕緣阻抗
Withstanding Voltage: 1500V AC/minute
耐電壓
Temperature Range: -25℃~+85℃
適用溫度

REACH
RoHS Compliant

HOUSING

Part No.: **P11351B~P11356B**
產品編號
P11351G~P11356G

Material: Noryl 94V-1
材質
Suitable Contact: 11351BS-2 11351PS-2
配合端子
Suitable Connector: M11351~M11356
配合公座
Acceptable Wire: AWG#16~24
適用電線

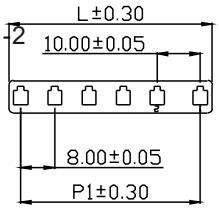

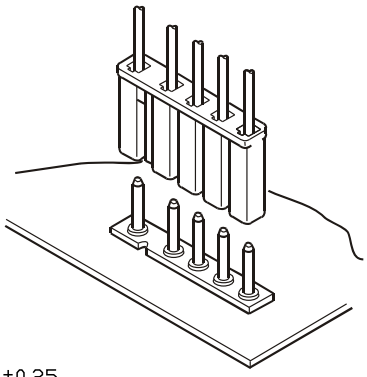

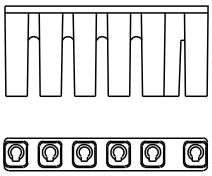

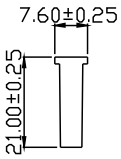

HOUSING

Part No.: **P113528 P113528B(BLACK)**
產品編號
Material: Noryl 94V-1
材質
Suitable Contact: 11351BS-2 11351PS-2
配合端子
Suitable Connector: M113528
配合公座
Acceptable Wire: AWG#16~24
適用電線
Packing: 1,000PCS(Bag)
包裝數量

Part No. P113528

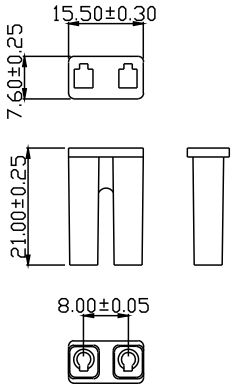

Unit: mm

PartNo.	POS.	Color	L	P1	Pack.
P11351B	1	Black	8.00	6.50	1000
P11352B	2	Black	15.50	10.00	1000
P11353B	3	Black	23.50	18.00	500
P11354B	4	Black	31.50	26.00	500
P11355B	5	Black	39.50	34.00	500
P11356B	6	Black	47.50	42.00	500

PartNo.	POS.	Color	L	P1	Pack.
P11351G	1	Grey	8.00	6.50	1000
P11352G	2	Grey	15.50	10.00	1000
P11353G	3	Grey	23.50	18.00	500
P11354G	4	Grey	31.50	26.00	500
P11355G	5	Grey	39.50	34.00	500
P11356G	6	Grey	47.50	42.00	500

Behave in conformity with continualproduct development policy, SinSheng (STM) reserves the rightof specification changing of contentsdescribed in this catalogue atany time and without priornotice. Please contact the salesdepartment nearby for most updatedinformation.
由於產品持續開發的政策, 信盛(STM)保留隨時變更本目錄所述之規格且不需提前通知的權利. 請連繫業務處查詢最新的產品資訊.

HOUSING - Long Type

Part No.: **P11351LG~P11356LG**
產品編號
P11351LB~P11356LB

Material: Noryl 94V-0
材質
Suitable Contact: 11351BS-2 11351PS-2
配合端子
Suitable Connector: M11351~M11356
配合公座
Acceptable Wire: AWG# 16~24
適用電線

PERFORMANCE

Electrical Rating: AC/DC 250V 7A
額定電壓電流
Insulation Resistance: 1000MΩ min.
絕緣阻抗
Withstanding Voltage: 1500V AC/minute
耐電壓
Temperature Range: -25℃~+105℃
適用溫度

REACH
RoHS Compliant

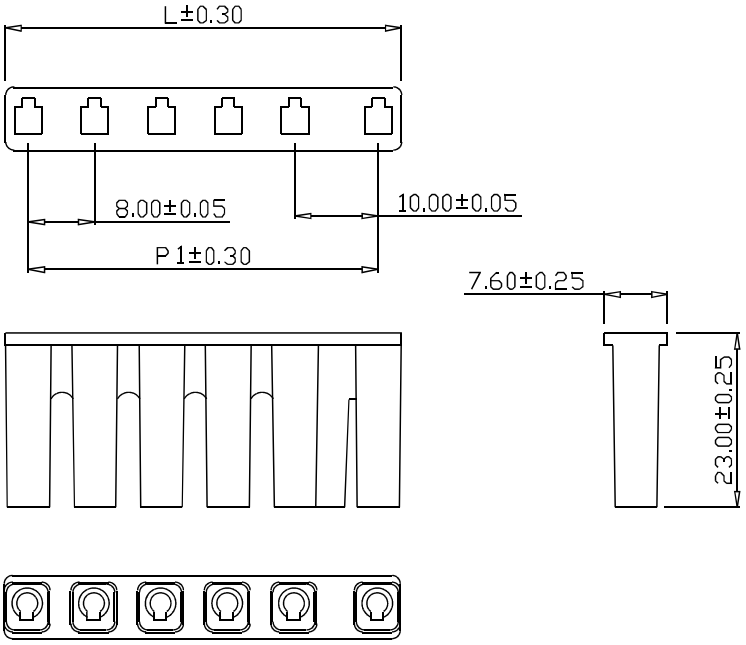

10-8.0mm

Unit: mm

PartNo.	POS.	Color	L	P1	Pack.
P11351LG	1	Grey	8.00	6.50	1000
P11352LG	2	Grey	15.50	10.00	1000
P11353LG	3	Grey	23.50	18.00	500
P11354LG	4	Grey	31.50	26.00	500
P11355LG	5	Grey	39.50	34.00	500
P11356LG	6	Grey	47.50	42.00	500

Unit: mm

PartNo.	POS.	Color	L	P1	Pack.
P11351LB	1	Black	8.00	6.50	1000
P11352LB	2	Black	15.50	10.00	1000
P11353LB	3	Black	23.50	18.00	500
P11354LB	4	Black	31.50	26.00	500
P11355LB	5	Black	39.50	34.00	500
P11356LB	6	Black	47.50	42.00	500

CONNECTOR

Part No.: **M11351~M11356**
產品編號
Material: Housing: Black Bakelite
材質 塑膠座 黑色電木
Contact Pin: Brass, Nickel-plated
接觸針 黃銅 鍍
Suitable Contact: 11351BS-2 11351PS-2
配合端子
Suitable Housing: P11351B~P11356B
配合塑膠
P11351G~P11356G
P11351LG~P11356LG
P11351LB~P11356LB

Acceptable Wire: AWG# 16~24
適用電線
Round Contact Pin: ϕ2.36±0.02mm
圓型

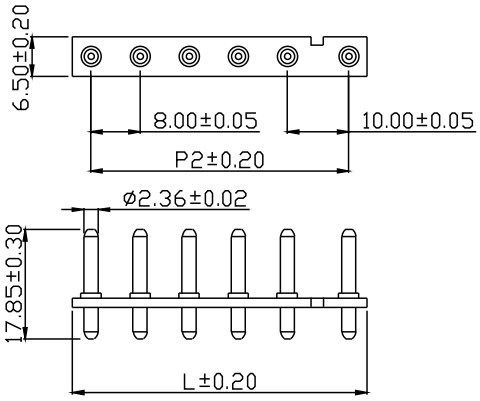

PERFORMANCE

Electrical Rating: AC/DC 250V 7A
額定電壓電流
Insulation Resistance: 1000MΩ min.
絕緣阻抗
Withstanding Voltage: 1500V AC/minute
耐電壓
Temperature Range: -25℃~+85℃
適用溫度

RoHS Compliant

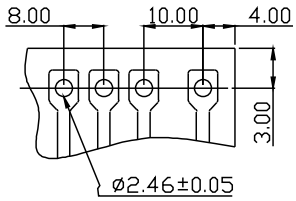

P.C.B LAYOUT

CONNECTOR

Part No.: **M113528**
產品編號
Material: Housing: Black Baklite
材質 塑膠座 黑色電木
Contact Pin: : Brass, Nickel-plated
接觸針 黃銅, 鍍
Suitable Contact: 11351BS-2 11351PS-2
配合端子
Suitable Connector: P113528 P113528B
配合塑膠
Acceptable Wire: AWG# 16~24
適用電線
Round Contact Pin: ϕ2.36±0.02mm
圓型

Part No. M113528

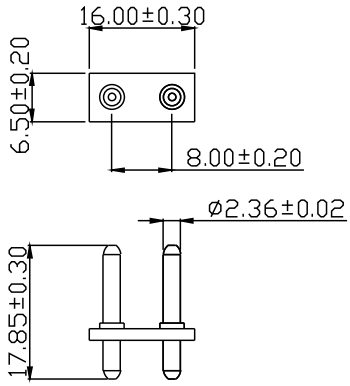

Unit: mm

Part No.	POS.	L	P2	Pack.
M11351	1	6.00	6.50	500
M11352	2	16.00	10.00	500
M11353	3	24.00	18.00	500
M11354	4	32.00	26.00	500
M11355	5	40.00	34.00	500
M11356	6	48.00	42.00	500

TERMINAL

Part No.: **11351BS-2 11351PS-2** (Side-feed)
產品編號
Thickness: 0.25mm
銅板厚度
Material: Brass (BS) Phosphor Bronze (PS)
材質 黃銅 磷青銅
Surface Treatment: Tin-plated
表面處理 鍍錫
Acceptable Wire: AWG# 16~24
適用電線
Insulation O.D.: 1.50~2.50mm
線皮外徑
Suitable Housing: P11351B~P11356B
配合塑膠
P11351G~P11356G
P11351LG~P11356LG
P11351LB~P11356LB
P113528 P113528B

Suitable Connector: M11351~M11356 M113528
配合公座
Packing: 7,500PCS(Reel) : 11351BS-2 11351PS-2
包裝數量

PERFORMANCE

Electrical Rating: AC/DC 250V 7A
額定電壓電流
Insulation Resistance: 1000MΩ min.
絕緣阻抗
Withstanding Voltage: 1500V AC/minute
耐電壓
Temperature Range: -25℃~+85℃
適用溫度

REACH
RoHS Compliant

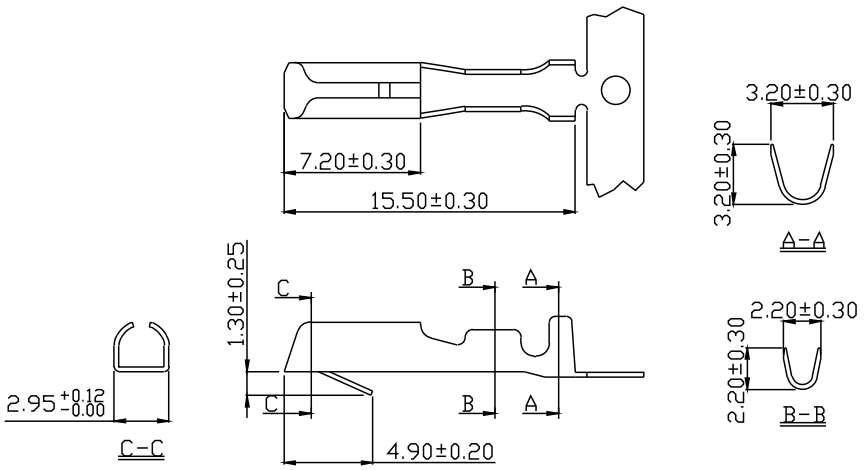

10-8.0mm