24081

Pitch *3.5mm* Wire to Board Connectors

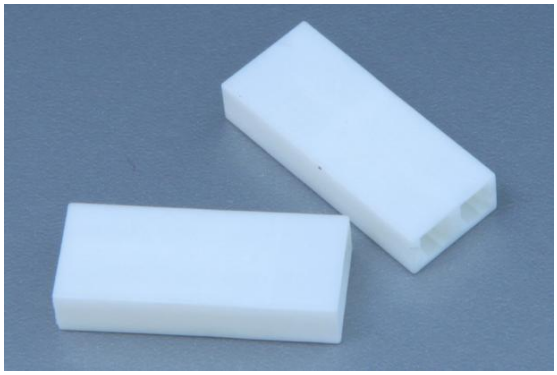

PERFORMANCE

Electrical Rating: AC/DC 1400V 1A
額定電壓電流
Insulation Resistance: 1000MΩ min.
絕緣阻抗
Withstanding Voltage: 3800V AC/minute
耐電壓
Temperature Range: -25℃~+85℃
適用溫度

RoHS Compliant

TERMINAL

Part No.: **24081PS-2**
產品編號
Thickness: 0.20mm
銅板厚度
Material: Phosphor Bronze (PS)
材質 磷青銅
Surface Treatment: Tin-plated
表面處理 鍍錫
Applicable Wire: AWG# 24~28
適用電線
Insulation O.D.: 1.20~1.80mm
線皮外徑
Suitable Housing: P24081P2
配合塑膠
Packing: 10,000PCS(Reel)
包裝數量

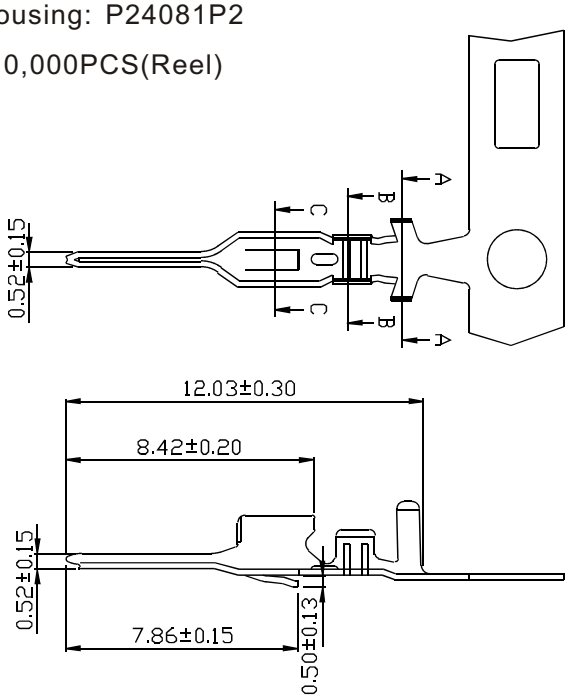

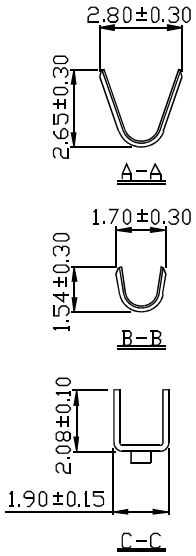

3.50mm

Behave in conformity with continualproduct development policy, SinSheng (STM) reserves the rightof specification changing of contentsdescribed in this catalogue atany time and without priornotice. Please contact the salesdepartment nearby for most updatedinformation.
由於產品持續開發的政策, 信盛(STM)保留隨時變更本目錄所述之規格且不需提前通知的權利. 請連繫業務處查詢最新的產品資訊.

HOUSING

Part No.: **P24081P2**
產品編號
Material: Nylon 94V-0
材質
Suitable Contact: 24081PS-2
配合端子
Applicable Wire: AWG# 24~28
適用電線
Packing: 1,000PCS (Bag)
包裝數量

PERFORMANCE

Electrical Rating: AC/DC 1400V 1A
額定電壓電流
Insulation Resistance: 1000MΩ min.
絕緣阻抗
Withstanding Voltage: 3800V AC/minute
耐電壓
Temperature Range: -25℃~+85℃
適用溫度

RoHS Compliant

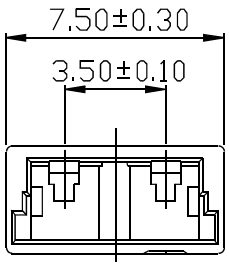

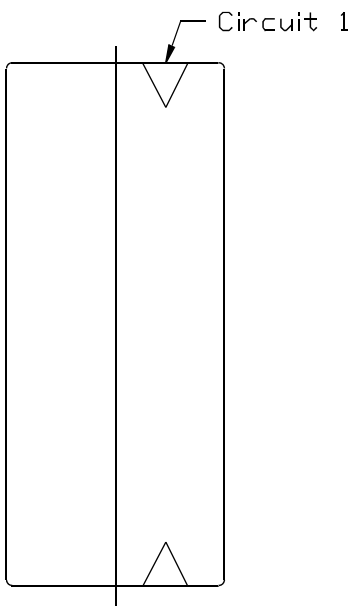

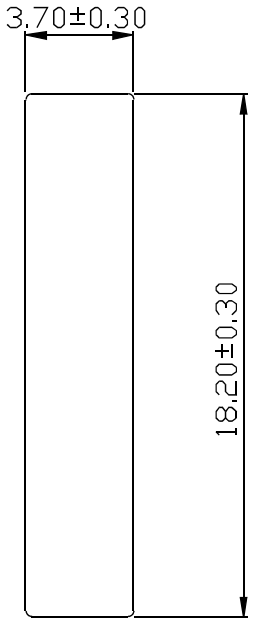

3.50mm