2421

Pitch *3.96mm* Wire to Board Connectors

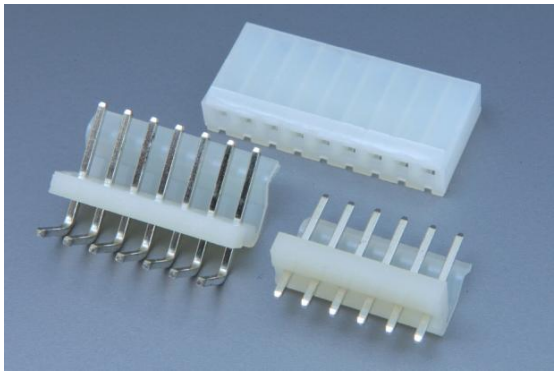

PERFORMANCE

Electrical Rating: AC/DC 250V 7A
額定電壓電流
Insulation Resistance: 1000MΩ min.
絕緣阻抗
Withstanding Voltage: 1500V AC/minute
耐電壓
Temperature Range: -25℃~+85℃
適用溫度

Halogen Free
REACH
RoHS Compliant

CONNECTOR - Top Entry

Part No.: **M24212~M242114**
產品編號
Material: Housing: Nylon 94V-2
材質 塑膠座
Contact Pin: Brass, Tin-plated
接觸針 黃銅, 鍍錫
Suitable Contact: 24221BS-2 24224BS-2
配合端子
24212BS-2 24213BS-2

Suitable Housing: P24212~P242114
配合塑膠
Applicable Wire: AWG# 18~24
適用電線
Square Contact Pin: 1.14±0.02mm
方型接觸針

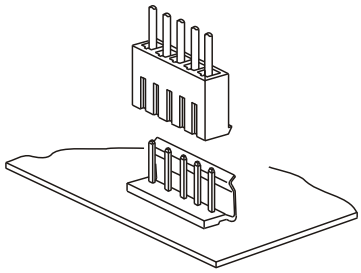

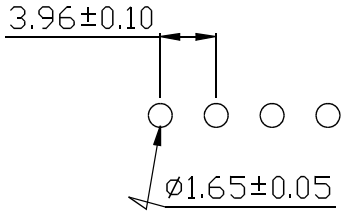

P.C.B LAYOUT

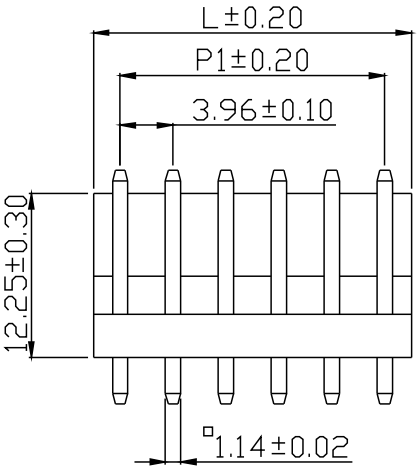

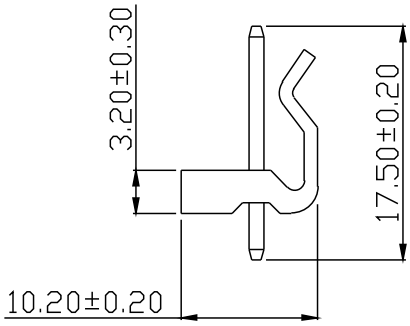

Unit: mm

Part No.	POS.	L	P1	Pack.
M24212	2	7.92	3.96	1000
M24213	3	11.88	7.92	1000
M24214	4	15.84	11.88	1000
M24215	5	19.80	15.84	1000
M24216	6	23.76	19.80	1000
M24217	7	27.72	23.76	500
M24218	8	31.68	27.72	500

Part No.	POS.	L	P1	Pack.
M24219	9	35.64	31.66	500
M242110	10	39.60	35.64	500
M242111	11	43.56	39.60	500
M242112	12	47.52	43.56	250
M242113	13	51.48	47.52	250
M242114	14	55.44	51.48	250

Behave in conformity with continualproduct development policy, SinSheng (STM) reserves the rightof specification changing of contentsdescribed in this catalogue atany time and without priornotice. Please contact the salesdepartment nearby for most updatedinformation.
由於產品持續開發的政策, 信盛(STM)保留隨時變更本目錄所述之規格且不需提前通知的權利. 請連繫業務處查詢最新的產品資訊.

CONNECTOR - Side Entry

Part No.: **M24212R~M242114R**
產品編號

Material: Housing: Nylon 94V-2
材質 塑膠座

Contact Pin: Brass, Tin-plated
接觸針 黃銅, 鍍錫

Suitable Contact: 24221BS-2 24224BS-2
配合端子

24212BS-2 24213BS-2

Suitable Housing:P24212~P242114
配合塑膠

Applicable Wire:AWG# 18~24
適用電線

Square Contact Pin: 1.14±0.02mm
方型接觸針

PERFORMANCE

Electrical Rating: AC/DC 250V 7A
額定電壓電流

Insulation Resistance: 1000MΩ min.
絕緣阻抗

Withstanding Voltage: 1500V AC/minute
耐電壓

Temperature Range: -25℃~+85℃
適用溫度

Halogen Free
REACH
RoHS Compliant

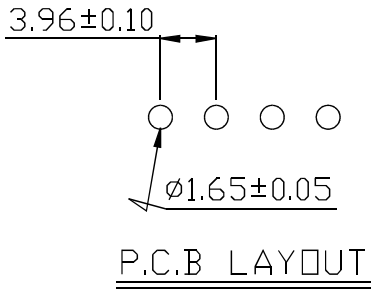

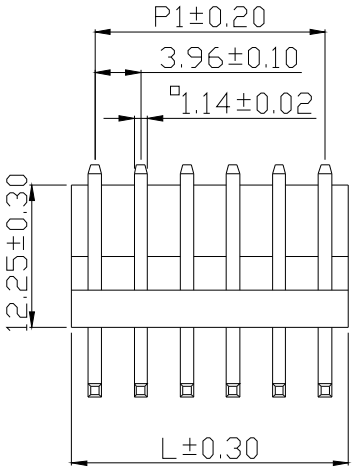

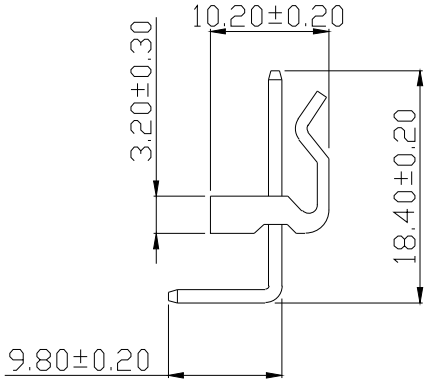

3.96mm

Unit: mm

PartNo.	POS.	L	P1	Pack.	PartNo.	POS.	L	P1	Pack.
M24212R	2	7.92	3.96	1000	M24219R	9	35.64	31.68	500
M24213R	3	11.88	7.92	1000	M242110R	10	39.60	35.64	250
M24214R	4	15.84	11.88	1000	M242111R	11	43.56	39.60	250
M24215R	5	19.80	15.84	1000	M242112R	12	47.52	43.56	250
M24216R	6	23.76	19.80	500	M242113R	13	51.48	47.52	250
M24217R	7	27.72	23.76	500	M242114R	14	55.44	51.48	250
M24218R	8	31.68	27.72	500					

HOUSING

Part No.: **P24212~P242114**
產品編號

Material: Nylon 94V-2
材質

Suitable Contact: 24221BS-2 24224BS-2
配合端子
24212BS-2 24213BS-2

Suitable Connector: M24212~M242114
配合公座
M24212R~M242114R

Applicable Wire: AWG# 18~24
適用電線

PERFORMANCE

Electrical Rating: AC/DC 250V 7A
額定電壓電流

Insulation Resistance: 1000MΩ min.
絕緣阻抗

Withstanding Voltage: 1500V AC/minute
耐電壓

Temperature Range: -25℃~+85℃
適用溫度

Halogen Free
REACH
RoHS Compliant

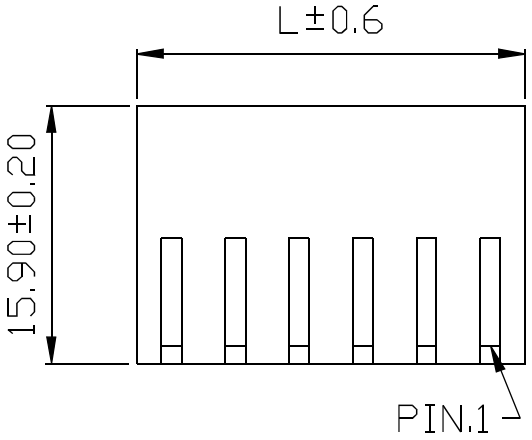

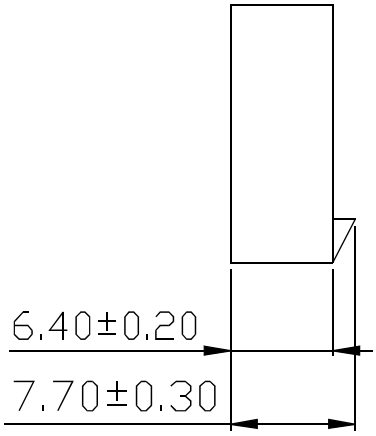

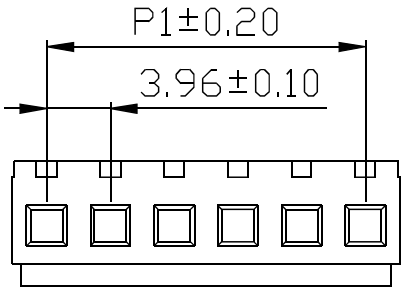

3.96mm

Unit: mm

PartNo.	POS.	L	P1	Pack.	PartNo.	POS.	L	P1	Pack.
P24212	2	8.92	3.96	500	P24219	9	36.64	31.68	500
P24213	3	12.88	7.92	500	P242110	10	40.60	35.64	500
P24214	4	16.84	11.88	500	P242111	11	44.56	39.60	500
P24215	5	20.80	15.84	500	P242112	12	48.52	43.56	500
P24216	6	24.76	19.80	500	P242113	13	52.48	47.52	500
P24217	7	28.72	23.76	500	P242114	14	56.44	51.48	500
P24218	8	32.68	27.72	500					

TERMINAL

Part No.: **24221BS-2**
產品編號
Thickness: 0.25mm
銅板厚度
Material: Brass
材質 黃銅
Surface Treatment: Tin-plated
表面處理 鍍錫
Applicable Wire: AWG# 18-24
適用電線
Insulation O.D.: 1.50~2.10mm
線皮外徑
Suitable Housing: P24212~P242114
配合塑膠
Suitable Connector: M24212~M242114
配合公座
M24212R~M242114R

Packing: 7,500PCS(Reel)
包裝數量

PERFORMANCE

Electrical Rating: AC/DC 250V 7A
額定電壓電流
Insulation Resistance: 1000MΩ min.
絕緣阻抗
Withstanding Voltage: 1500V AC/minute
耐電壓
Temperature Range: -25℃~+85℃
適用溫度

REACH
RoHS Compliant

3.96mm

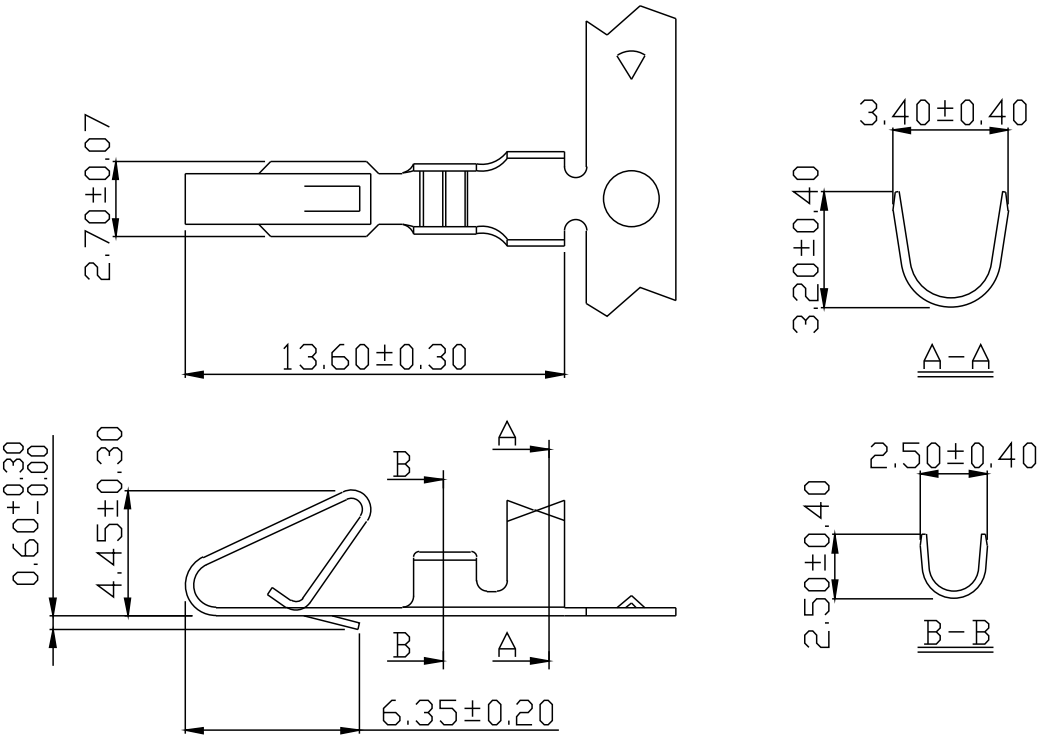

TERMINAL

Part No.: **24212BS-2**
產品編號
Thickness: 0.25mm
銅板厚度
Material: Brass
材質 黃銅
Surface Treatment: Tin-plated
表面處理 鍍錫
Applicable Wire: AWG# 18-24
適用電線
Insulation O.D.: 1.20~1.50mm
線皮外徑
Suitable Housing: P24212~P242114
配合塑膠
Suitable Connector: M24212~M242114
配合公座
M24212R~M242114R

Packing: 5,000PCS(Reel)
包裝數量

PERFORMANCE

Electrical Rating: AC/DC 250V 7A
額定電壓電流
Insulation Resistance: 1000MΩ min.
絕緣阻抗
Withstanding Voltage: 1500V AC/minute
耐電壓
Temperature Range: -25℃~+85℃
適用溫度

REACH
RoHS Compliant

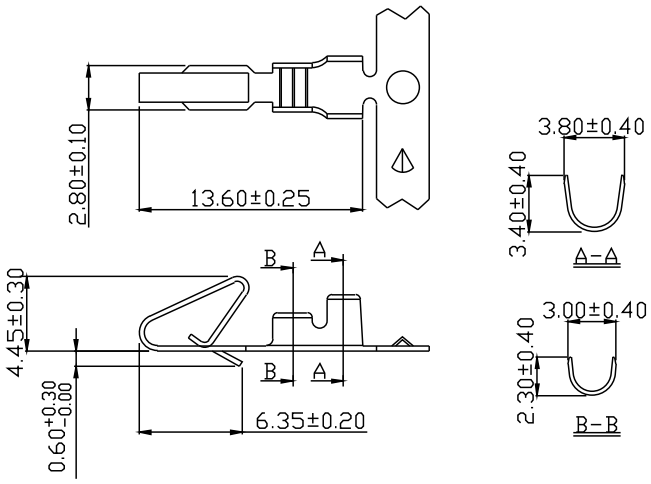

3.96mm

TERMINAL

Part No.: **24213BS-2**
產品編號
Thickness: 0.30mm
銅板厚度
Material: Brass
材質
Surface Treatment: Tin-plated
表面處理
Applicable Wire: AWG# 18-24
適用電線
Insulation O.D.: 1.50~2.10mm
線皮外徑
Suitable Housing:
配合塑膠
P24212~P242114

Suitable Connector:
配合公座
M24212~M242114

M24212R~M242114R

Packing: 5,000PCS(Reel)
包裝數量

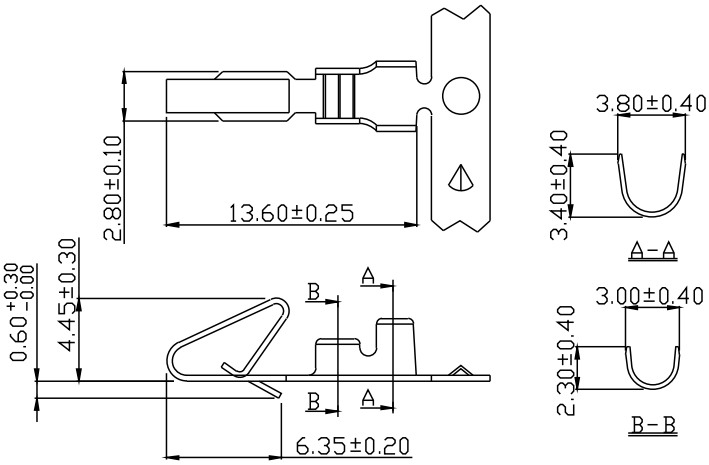

TERMINAL

Part No.: **24224BS-2**
產品編號
Thickness: 0.30mm
銅板厚度
Material: Brass
材質 黃銅
Surface Treatment: Tin-plated
表面處理 鍍錫
Applicable Wire: AWG# 18-24
適用電線
Insulation O.D.: 1.50~2.10mm
線皮外徑
Suitable Housing: P24212~P242114
配合塑膠
Suitable Connector: M24212~M242114
配合公座
M24212R~M242114R

Packing: 7,500PCS(Reel)
包裝數量

PERFORMANCE

Electrical Rating: AC/DC 250V 7A
額定電壓電流
Insulation Resistance: 1000MΩ min.
絕緣阻抗
Withstanding Voltage: 1500V AC/minute
耐電壓
Temperature Range: -25℃~+85℃
適用溫度

REACH
RoHS Compliant

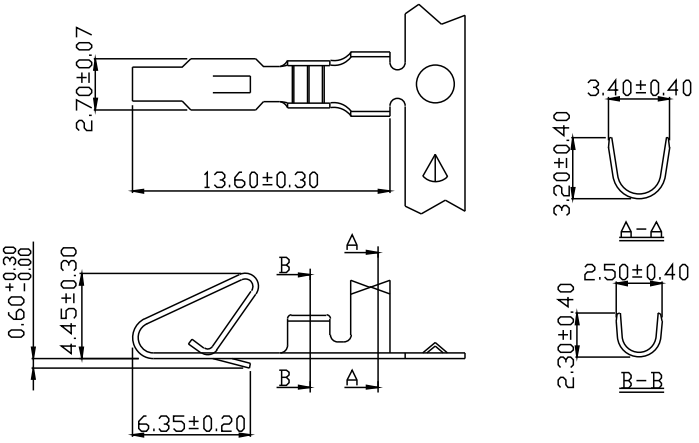

3.96mm